3A

7YMP　斜夾三通

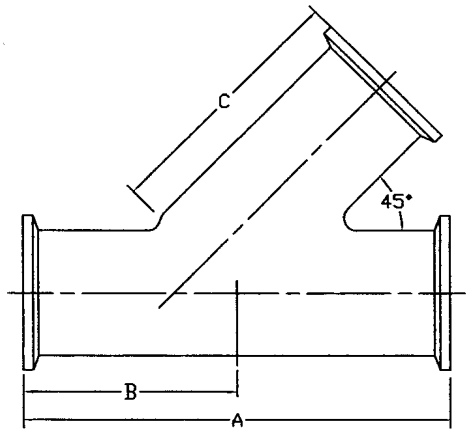

REDUCING TEE (MM)

SIZE	A	B	C		
1″	120.6	60.3	80		
1 1/2″	139.8	69.9	93.6		
2″	177.8	88.9	120.4		